CITY OF HALLANDALE BEACH
APPLICATION FORM

NO APPLICATIONS ARE AUTOMATICALLY SCHEDULED FOR **ANY** MEETINGS. APPLICATIONS MUST BE DETERMINED TO BE COMPLETE BY STAFF BEFORE ANY PROCESSING OCCURS.

PLEASE PRINT OR TYPE

Date of Application: 05/09/13
Name of Owner: ~~Pembroke Road FD LLC~~ Choice One Mortgage Corp.
Name of Applicant, if different from owner: Pembroke Road FD LLC - Daniel Abreu
Mailing Address: 14011 S.W. 20 Street Miami FL 33175
Telephone: (305) 345-7475
Name of Authorized Representative, if different from applicant: Arturo Fanjul - Architect
Mailing Address: 1127 S Dixie Highway Coral Gables FL
Telephone: 305-726-8313
Location of Subject Property: 633 Pembroke Road
Folio Number: 5142-21-02-0710
Legal Description: Lots 7, 8, 9, 10, 11 + 12, Block 1 of Nella Park according to the plat thereof as recorded in Plat Book 2 page 32 of the public records of Broward County.

TYPE OF APPLICATION (Check the ones which apply to the request(s))

____ REZONING FROM: _____ District TO: _____ District
SIZE OF SUBJECT PROPERTY TO BE CONSIDERED FOR REZONING _____ (acres)
____ CONDITIONAL USE
____ VARIANCE
____ LAND USE PLAN AMENDMENT
X REDEVELOPMENT AREA MODIFICATION
____ SPECIAL SIGN VARIANCE
____ TEXT CHANGES (CITY CODE) _____
____ MINOR DEVELOPMENT (Less than ten (10) residential units or less than 4,000 sq. ft. gross floor area)
Residential-Number of Units _____
Commercial-Sq. Ft. _____
____ MAJOR DEVELOPMENT(Ten or more residential units or more than 4,000 square feet of gross floor area)
Residential-Number of Units _____
Commercial-Sq. Ft. _____
____ Platting or Replatting a Subdivision or portion thereof
(Size of property _____ acres)
____ Other _____

BRIEF DESCRIPTION OF REQUEST

Build an 8242 square foot Family Dollar Retail Building.

FAMILY DOLLAR

COVER SHEET & INDEX OF DRAWINGS

ARCHITECTURE		REVISIONS	
CS	COVER SHEET		
SURVEY	SITE SURVEY		
PD-1	PAVING, GRADING &DRAINAGE COVER SHEET		
PD-2	PAVING, GRADING &DRAINAGE COVER PLAN		
PD-3	DRAINAGE DETAILS		
PM-1	PAVEMENT MARKING PLAN & DETAILS		
SWPP-1	STORMWATER POLLUTION PREVENTION PLAN		
WS-1	WATER & SEWER PLAN		
LA1	LANDSCAPE PLAN		
A1	SITE PLAN AND NOTES		
A2	ELEVATIONS & SCHEDULES		
A3	FLOOR PLANS AND NOTES		
PH-1	PHOTOMETRICS		

AERIAL SITE MAP

SCALE: NTS.

PROJECT TEAM

OWNER	Choice One Mortgage	ARCHITECT:	Arturo G. Fanjul, RA AR0017585
	18400 SW 97 AVE.		Fanjul & Associates, LLC AA26000725
	CUTLER BAY, FL 33017		900 Bay Drive Unit 208
			Miami Beach, FL 33141
			PH. 305.726.8313 FAX. 305.356.3686
APPLICANT	PEMBROKE ROAD FD, LLC		arturo@fanjularchitects.com
	14011 SW 20 STREET		www.fanjulandassociates.com
	MIAMI, FL 33175		
		CIVIL ENGINEER	ROBAYNA & ASSOCIATES, INC.
CONTRACTOR	CANDELA DEVELOPERS		Oscar Robayna, P.E.
	14011 SW 20 STREET		5723 NW 158 Street
	MIAMI, FL 33175		Miami Lakes, FL 33014

PROPERTY INFORMATION

ADDRESS	633 PEMBROKE ROAD
FOLIO:	5142-21-02-0710
LEGAL DESCRIPTION:	BELMAR 2-22 B LOTS 7,8,9,10,11 & 12 BLK 104 ALL LESS N 30 FOR RD,LESS EXT AREA FORMED BY A 12 RAD ARC TANG TO E/L OF LOT 12 & TANG TO A LINE 30 AKA:LOTS 7 THRU 12 LESS N 30 FOR R/W BLK 1 NELLA PARK 2-32 B
LOT SIZE:	33,354
YEAR BUILT:	
ZONING:	COMMERCIAL-MEDIUM INTESITY
TYPE OF CONSTRUCTION	TYPE 2 UN SPRINKLERED
OCCUPANCY:	MERCANTILE "C" CLASS
TENANT SF:	8,242
REQUIRED NUMBER OF EXISTS	2 REQUIRED (4 PROVIDED)
EXISTING DEMISING WALLS	1HR FIRE RATED REQUIRED

FINISH REQUIREMENTS (GROUP M REFER TO TABLE 803.9)

AREA	SPRINKLERED	UNSPRINKLERED
EXITS	CLASS B MINIMUM	CLASS A MINIMUM
EXIT ACCESS	CLASS C MINIMUM	CLASS B MINIMUM
OTHER SPACES	CLASS C MINIMUM	CLASS C MINIMUM
		TENANT FLOOR FINISHES: CLASS I OR II

FIRE RESISTANT REQUIREMENTS

COLUMNS:	TABLE 601 OF FBC 2010
BEAMS & GIRDERS	TABLE 601 OF FBC 2010
ROOFS:	TABLE 601 OF FBC 2010

DESIGN CODES

Building (Existing Renovation Area)	2010 Florida Building Code - Existing Buildings
Mechanical	2010 Florida Building Code Mechanical
Plumbing	2010 Florida Building Code Plumbing
Electrical	FBC 2010 Refers to NFPA 70 NEC 2008
Life Safety Code	2010 Florida Fire Prevenetion Code
Accessibility	2012 Florida Accessibility Code

SCOPE OF WORK

NEW 8242 SF MERCANTILE BUILDING WITH SURFACE PARKING AND LANDSCAPING.

STRUCTURE WILL BE CONSTRUCTION TYPE II - UN SPRINKLED.

FANJUL & ASSOCIATES, LLC
ARCHITECTURE, PLANNING & INTERIOR DESIGN

AA26000725

ARTURO G. FANJUL, RA
PRESIDENT

1172 S. DIXIE HIGHWAY SUITE 333
CORAL GABLES, FL 33146

PH. 305 726.8313
FAX 305 356.3686

arturo@fanjularchitects.com

"A BETTER LIFE THROUGH DESIGN"

ARTURO G. FANJUL, AR0017585
STATE OF FLORIDA REGISTERD ARCHITECT

CONSTRUCTION DOCUMENTS FOR:

FAMILY DOLLAR

633 PEMBROKE ROAD
HALLANDALE BEACH, FL
33009

COVER SHEET

REVISION	NO.
DRC-REWORK-1 6/25/13	

DATE: 5/15/13
SCALE: AS NOTED
DRAWN: AGF
CHECKED:
JOB NO. 13-0107
PERMIT NO.

OWNERSHIP

OF THESE DOCUMENTS & SPECIFICATIONS AS INSTRUMENTS OF SERVICE ARE AND SHALL REMAIN THE PROPERTY OF THE ARCHITECT WHETHER THE PROJECT THEY ARE MADE FOR IS EXECUTED OR NOT. THEY SHALL NOT BE USED BY OWNER OR OTHERS ON OTHER PROJECTS OR FOR ADDITIONS TO THIS PROJECT BY OTHERS. EXCEPT BY AGREEMENT IN WRITING AND WITH APPROPRIATE COMPENSATION TO THE ARCHITECT.

CS

PLANTING NOTES

1. ALL PLANT MATERIAL SHALL BE FLORIDA No 1 OR BETTER.
2. THE CONTRACTOR SHALL FIELD LOCATE ALL UTILITIES PRIOR TO ANY EXCAVATION.
3. PLANTING SOIL SHALL BE 50% SAND 50% MUCK PULVERIZED.
4. ALL PLANT BEDS SHALL BE EXCAVATED TO A DEPTH OF (24") TWENTY FOUR INCHES AND BACKFILLED WITH PLANTING SOIL.
5. ALL SHRUBS, TREES AND GROUND COVER SHALL RECEIVE (2") TO INCHES DEPTH OF SHREDDED RED MULCH UPON COMPLETION.
6. GENERAL FERTILIZER SHRUBS, TREES AND GROUND COVER, LESCO 8-10-10 OR EQUAL SHALL BE APPLIED AT TIME OF PLANTING.
7. ALL TREES TO BE GUARANTEED FOR (1) ONE YEAR, SHRUBS FOR (6) SIX MONTH .
8. ALL LANDSCAPE AREAS TO RECEIVE 100% COVERAGE FROM AUTOMATED IRRIGATION SYSTEM. SHALL BE KEPT WEED FREE AND MULCHED TO A MINIMUM THREE (3) INCH DEPTH.

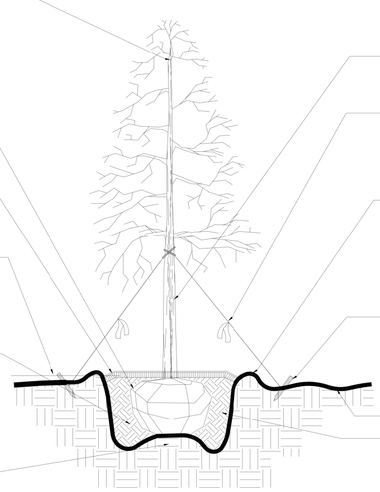

TREE PLANTING (2-4" CALIPER)

N.T.S.

NOTE: TOP OF ROOT BALL SHALL BE AT LEAST 1/2" ABOVE THE FINISH GRADE.

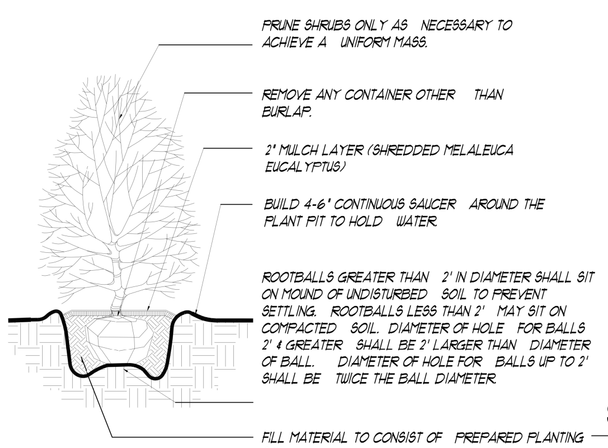

SHRUB PLANTING

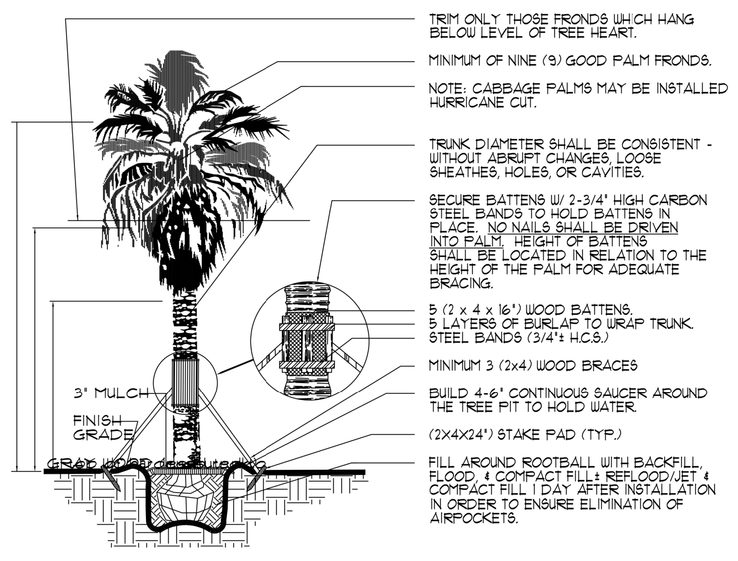

TYPICAL PALM TREE PLANTING

LANDSCAPE LEGEND INFORMATION			
ZONING DISTRICT B-G	NET LOT AREA	33,354	0.77 AC

OPEN SPACE	REQUIRED	PROVIDED
15% LANDSCAPE	5,003	7,272 sf
	MAXIMUM	PROVIDED
MAX. GRASS AREA (UPTO 75% OF LANDSCAPE AREA)	5,090	2,790 sf

SITE TREES		REQUIRED	PROVIDED
SITE TREE/LOT (1 TREE/1,500 SF)		22	22
MINIMUM NUMBER OF SPECIES		4	5
A.	NATIVE SITE TREES	11	13
B.	NON-NATIVE SITE TREES		4
C.	PALMS *		5

* PALMS COUNT 2 TO 1 FOR SITE TREES, 11 PALMS = 5 SITE TREES

STREET TREES		REQUIRED	PROVIDED
1 TREE/25 LINEAR FEET OF STREET FRONTAGE EXCLUDING ACCESSWAYS			
725 LINEAR FEET/25		29	29
A.	NATIVE STREET TREES		29
B.	NON-NATIVE STREET TREES		-

SHRUBS		REQUIRED	PROVIDED
A.	NATIVE SHRUBS		338
B.	NON-NATIVE SHRUBS		-

GROUNDCOVER		REQUIRED	PROVIDED
GROUNDCOVER			639
A.	NATIVE GROUNDCOVER		201
B.	NON-NATIVE GROUNDCOVER		438

99% OF TREES, SHRUBS AND GROUND COVER SELECTED FROM THE CITY'S APPROVED SPECIES LIST.

LANDSCAPE LEGEND

SYMBOL	TAG	NATIVE YES/NO		COMMON NAME / LATIN NAME	QTY	SIZE CALIPER	INSTALL HEIGHT	INSTALL CANOPY	MATURE HEIGHT	MATURE CANOPY	SPACING
				GROUNDCOVER							
	LAMO	YES		Lantana *Lantana montevidensis*	201	3 gal	18"	18"	24"	36"	2' OC
	LMBB		NO	LIRIOPE *Liriope muscari 'big blue'*	374	3 gal	12"	12"	18"	18"	1.5' OC
	EGBD		NO	BLUE DAZE *Evolvus glomeratus*	64	3 gal	12"	12"	18"	18"	2' OC
				SHRUBS							
	CHIC	YES		RED TIP COCOPLUM* *Chrysobalanus icaco*	155	3 gal	24"	24"	8'	8'	2' OC
	PSNE	YES		WILD COFFEE* *Psychotria nervosa*	36	3 gal	24"	24"	10'	18"	2' OC
	MUCA	YES		MUHLY GRASS *Muhlenbergia capillaris*	26	3 gal	24"	24"	36"	18"	2' OC
	EUFO	YES		SPANISH STOPPER* *Eugenia foetida*	84	7 gal	36"	36"	20'	10'	3' OC
	TRFL	YES		DWARF FAKAHATCHEE GRASS *Tripsacum floridiana*	37	3 gal	18"	18"	36"	18"	3' OC

*TO BE MAINTAINED AS HEDGE. COCOPLUM AT 3' TALL. WILD COFFEE AT 4' TALL. STOPPER AT 10' TALL.

				STREET TREES							
	ROEL	YES		ROYAL PALM* *Roystonea elata*	9	3"	20'	15'	50'	20'	20' OC
	SWMA	YES		MAHOGANY *Swietenia mahagoni*	5	3"	15'	6'	50'	30'	20' OC
	COER	YES		SILVER BUTTONWOOD *Conocarpus erectus var. sericeus*	15	3"	15'	6'	20'	20'	17' OC

*THE DESIGNATED STREET TREE FOR PEMBROKE ROAD IS THE ROYAL PALM. *DESIGN GUIDE MANUAL, CITY OF HALLANDALE BEACH, FLORIDA CITY OF CHOICE* , ADOPTED MARCH 30, 2006

				SITE TREES							
	CODI	YES		PIGEON PLUM *Cocoloba diversifolia*	6	3"	15'	6'	30'	25'	20' OC
	CLRO	YES		PITCH APPLE *Clusia rosea*	2	3"	15'	6'	30'	25'	N/A
	COBE	YES		ORANGE GEIGER *Cordia sebestena*	5	3"	15'	18"	20'	20'	13' OC
	TACA		NO	YELLOW TABEBUIA *Tabebuia caraiba*	2	3"	15'	18"	25'	15'	N/A
	LAIN		NO	CREPE MYRTLE Lagerstroemia indica	2	3"	15'	18"	30'	25'	N/A
				PALMS							
	PTEL		NO	ALEXANDER PALM (TRIPLE) *Ptychosperma elegans*	5	3"	15'	18"	25'	10'	9' OC
	DYCA		NO	CABADAE PALM *Dypsis cabadae*	6	3"	8'	18"	30'	15'	20' OC

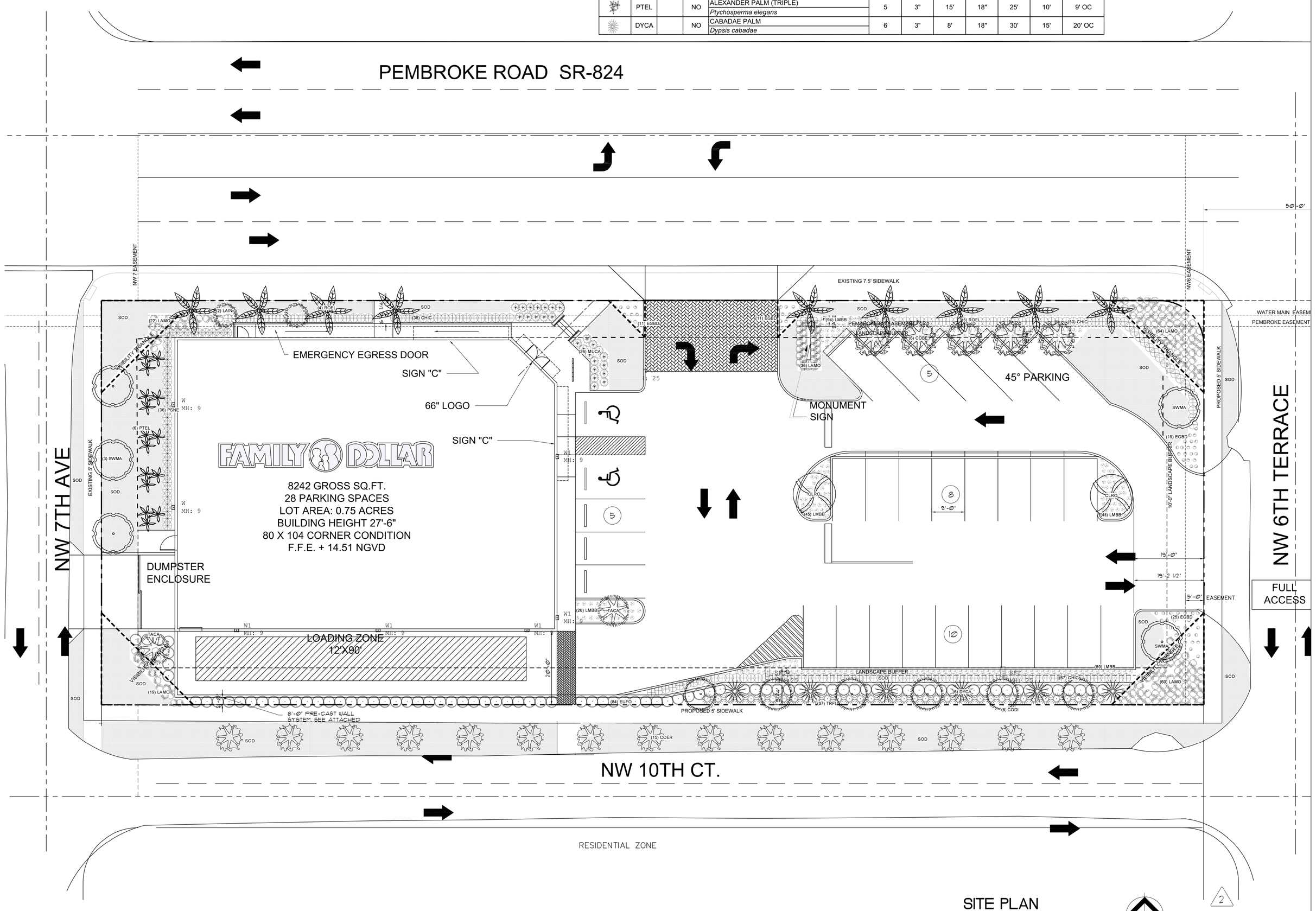

FANJUL & ASSOCIATES, LLC
ARCHITECTURE, PLANNING & INTERIOR DESIGN
AA26000725
ARTURO G. FANJUL, RA
PRESIDENT
1172 S. DIXIE HIGHWAY SUITE 333
CORAL GABLES, FL 33146
PH. 305 726.8313
FAX 305 356.3686
arturo@fanjularchitects.com
"A BETTER LIFE THROUGH DESIGN"
ARTURO G. FANJUL AR0017585
STATE OF FLORIDA REGISTERD ARCHITECT

CONSTRUCTION DOCUMENTS FOR:

FAMILY DOLLAR

633 PEMBROKE ROAD
HALLANDALE BEACH, FL
33009

LANDSCAPE PLAN

REVISION	NO.
DRC-REWORK-1 6/25/13	

DATE:	5/15/13
SCALE:	AS NOTED
DRAWN:	AGF
CHECKED:	
JOB NO.	13-0107
PERMIT NO.	

OWNERSHIP
OF THESE DOCUMENTS & SPECIFICATIONS AS INSTRUMENTS OF SERVICE ARE AND SHALL REMAIN THE PROPERTY OF THE ARCHITECT WHETHER THE PROJECT THEY ARE MADE FOR IS EXECUTED OR NOT. THEY SHALL NOT BE USED BY OWNER OR OTHERS ON OTHER PROJECTS OR FOR ADDITIONS TO THIS PROJECT BY OTHERS, EXCEPT BY AGREEMENT IN WRITING AND WITH APPROPRIATE COMPENSATION TO THE ARCHITECT.

LA1

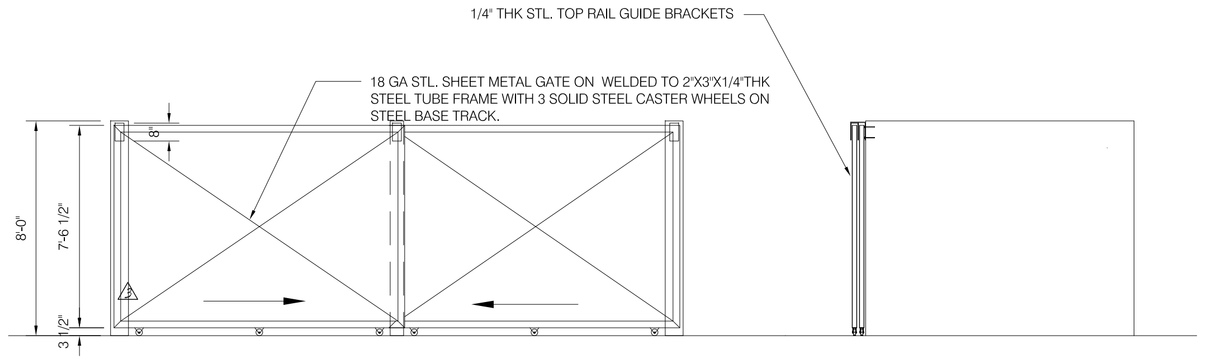

2 DUMPSTER ENCLOSURE DETAIL
SCALE:1/4"=1'-0"

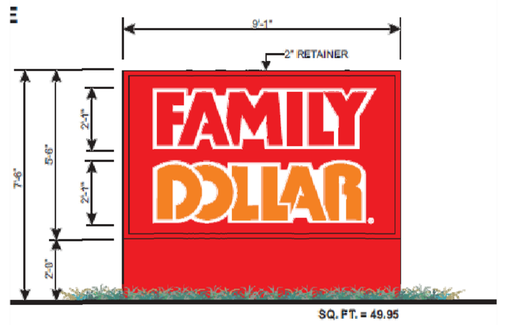

5'-6" x 9'-1" MONUMENT w/ 2' BASE

3 MONUMENT SIGN
SCALE:1/4"=1'-0"

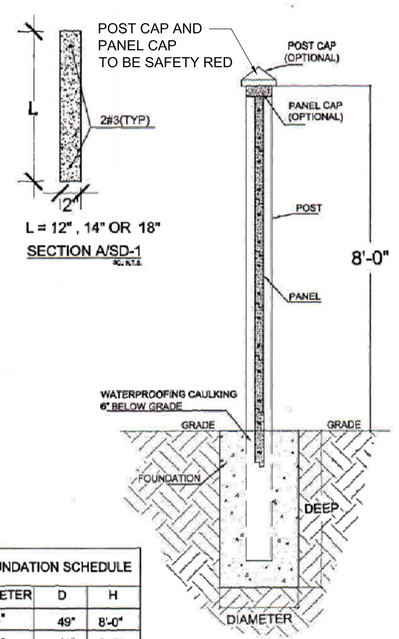

FOUNDATION SCHEDULE		
DIAMETER	D	H
12"	49"	8'-0"
18"	41"	8'-0"
24"	37"	8'-0"

4 8'-0" SCREEN WALL
SCALE: NTS

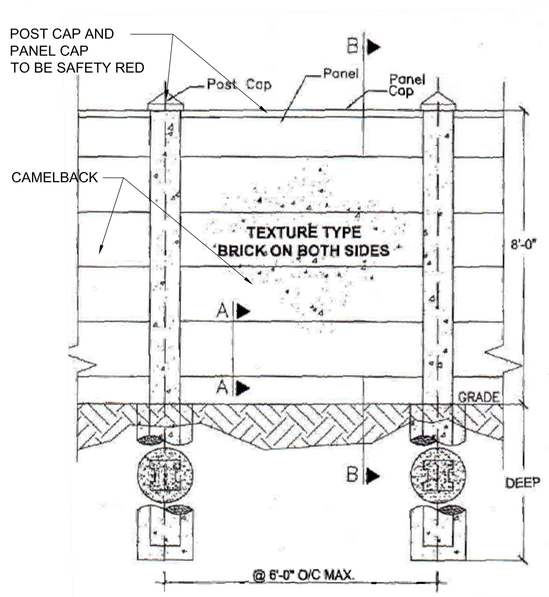

5 8'-0" SCREEN WALL
SCALE: NTS

ZONING LEGEND

A.- SITE DATA				
1-	PROJECT NAME	FAMIY DOLLAR STORE		
2-	PROPERTY ADDRESS	633 W PEMBROKE ROAD		
3-	ZONING DISTRICT	PEMBROKE RD. OVERLAY B-G		
B.- SITE COMPUTATION		REQUIRED	PROVIDED	
1-	GROSS LOT AREA		33,354	SF
2-	BUILDING AREA		8,242	sf
3-	F.A.R.		0.247	
4-	MIN. LANDSCAPE (15%)	5,003	7,272	SF
C.- GROSS BUILDING AREA		REQUIRED	PROVIDED	
1-	RETAIL AREA		7,034	SF
2-	SUPPORT AREA		1,208	SF
	TOTAL FAR	MINIMUM 1000 SF	8,242	SF
D.- BUILDING HIEGHT Sec.32-160		MAX	PROVIDED	
1-	BUILDING HIEGHT	100'-0"	30'-0"	
E.- SETBACKS Sec.32-160		REQUIRED	PROVIDED	
1-	FRONT (NORTH)	15'	10'	
2-	REAR (SOUTH)	20'	20'	
3-	SIDE (EAST)	15'	176'	
4-	SIDE (WEST)	15'	20'	
F.- PARKING		REQUIRED	PROVIDED	
1-	GLA/300 sf	27.47	28	
2-	HANDICAP SPACED	2	2	
3-	LOADING SPACES (12X50)	1	1	
	TOTAL PARKING	28	28	

AS PER TABLE 503 OF THE F.B.C. 2010 BUILDING IS TYPE II CONSTRUCTION, MECHANTILE OCCUPANCY CLASS B.

BUILDING COMPLIES WITH F.B.C. 2010 EDITION, SECTION 102.2 AND FLORIDA FIRE PREVENTION CODE 2010 CHAPTER 36 NEW MERCHANTILE

LEGAL DESCRIPTION:
BELMAR 2-22 B LOTS 7,8,9,10,11 & 12 BLK 104 ALL LESS N 30 FOR RD,LESS EXT AREA FORMED BY A 12 RAD ARC TANG TO E/L OF LOT 12 & TANG TO A LINE 30 AKA:LOTS 7 THRU 12 LESS N 30 FOR R/W BLK 1 NELLA PARK 2-32 B

TERMITE SOIL STATEMENT

ALL BUILDINGS SHALL HAVE PRE-CONSTRUCTION TREATMENT PROTECTION AGAINST TERMITES AS PER F.B.C. 1816.1.7. A CERTIFICATE OF COMPLIANCE SHALL BE ISSUED TO THE BUILDING DEPARTAMENT BY THE LICENSED PEST CONTROL COMPANY THAT CONTAINS THE FOLLOWING STATMENT:
"THE BUILDING HAS RECEIVED A COMPLETE TREATMENT FOR THE PREVENTION OF SUBTERRANEAN TERMITES. TREATMENT IS IN ACCORDANCE WITH THE RULES AND LAWS ESTABLISHED BY THE FLORIDA DEPARTMENT OF AGRICULTURE AND CONSUMER SERVICES".

LOCATION PLAN
SCALE : N.T.S.

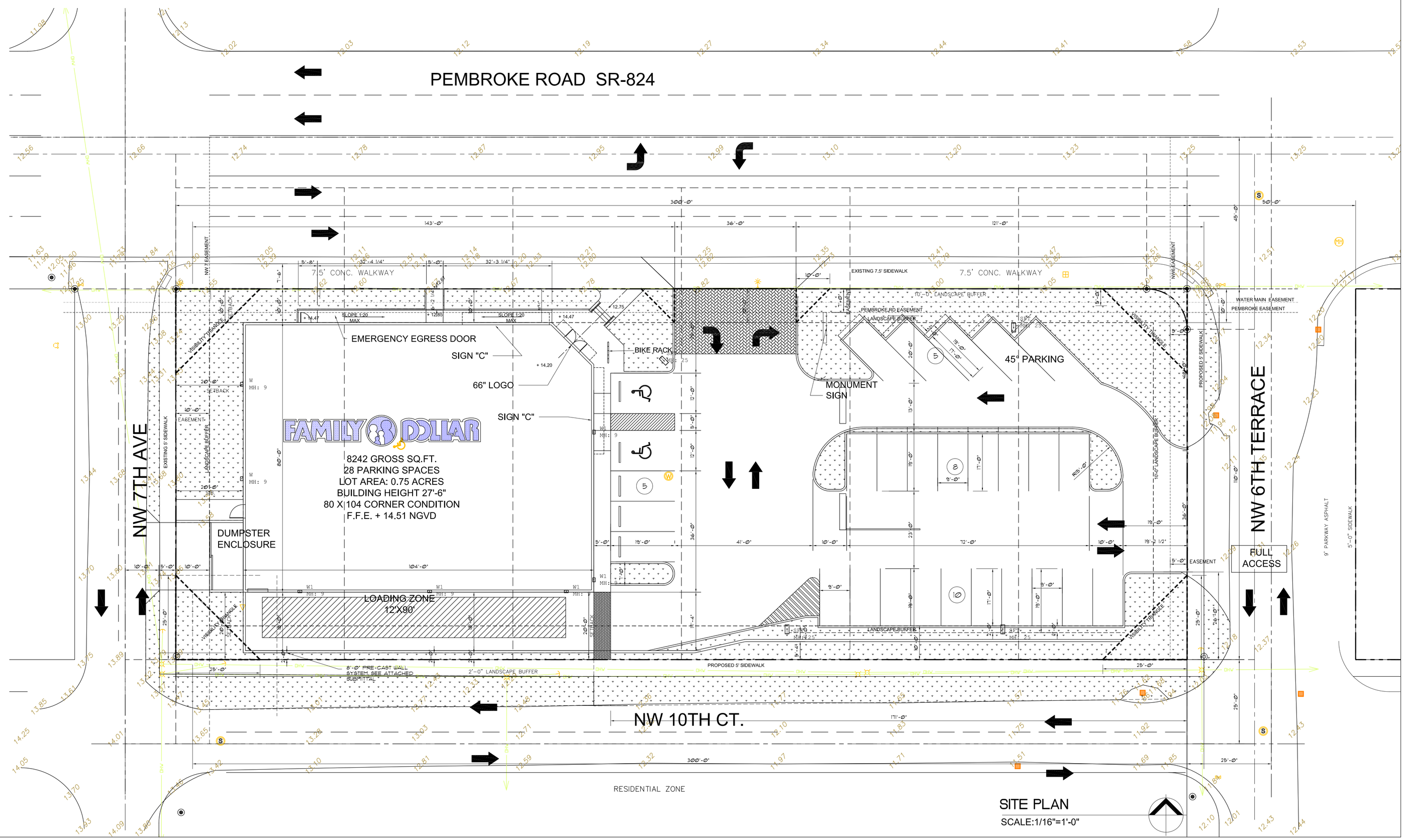

SITE PLAN
SCALE:1/16"=1'-0"

FANJUL & ASSOCIATES, LLC
ARCHITECTURE, PLANNING & INTERIOR DESIGN

AA26000725

ARTURO G. FANJUL, RA
PRESIDENT

1172 S. DIXIE HIGHWAY SUITE 333
CORAL GABLES, FL 33146

PH. 305 726.8313
FAX 305 356.3686

arturo@fanjularchitects.com

"A BETTER LIFE THROUGH DESIGN"

ARTURO G. FANJUL AR0017585
STATE OF FLORIDA REGISTERD ARCHITECT

CONSTRUCTION DOCUMENTS FOR:

FAMILY DOLLAR

633 PEMBROKE ROAD
HALLANDALE BEACH, FL
33009

SITE PLAN & ZONING DATA

REVISION	NO.
DRC-Rework-1 6/25/13	

DATE:	5/15/13
SCALE:	AS NOTED
DRAWN:	AGF
CHECKED:	
JOB NO.	13-0107
PERMIT NO.	

OWNERSHIP
OF THESE DOCUMENTS & SPECIFICATIONS AS INSTRUMENTS OF SERVICE ARE AND SHALL REMAIN THE PROPERTY OF THE ARCHITECT WHETHER THE PROJECT THEY ARE MADE FOR IS EXECUTED OR NOT. THEY SHALL NOT BE USED BY OWNER OR OTHERS ON OTHER PROJECTS OR FOR ADDITIONS TO THIS PROJECT BY OTHERS, EXCEPT BY AGREEMENT IN WRITING AND WITH APPROPRIATE COMPENSATION TO THE ARCHITECT.

A1

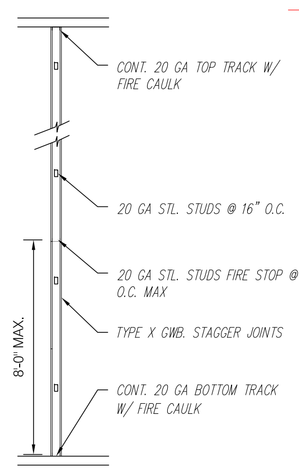

1 HOUR RATED ASSEMBLY.

- PROVIDE UL ASSEMBLY U465 AT STORAGE ROOM. SEAL ALL PENETRATIONS.
- USE 20 GA 3-5/8" STUDS @ 16" O.C. WITH 5/8" TYPE "X" GWB.
- SEAL TOP AND BOTTOM TRACK. PROVIDE HORIZONTAL FIRE STOP @ 8'-0" O.C.

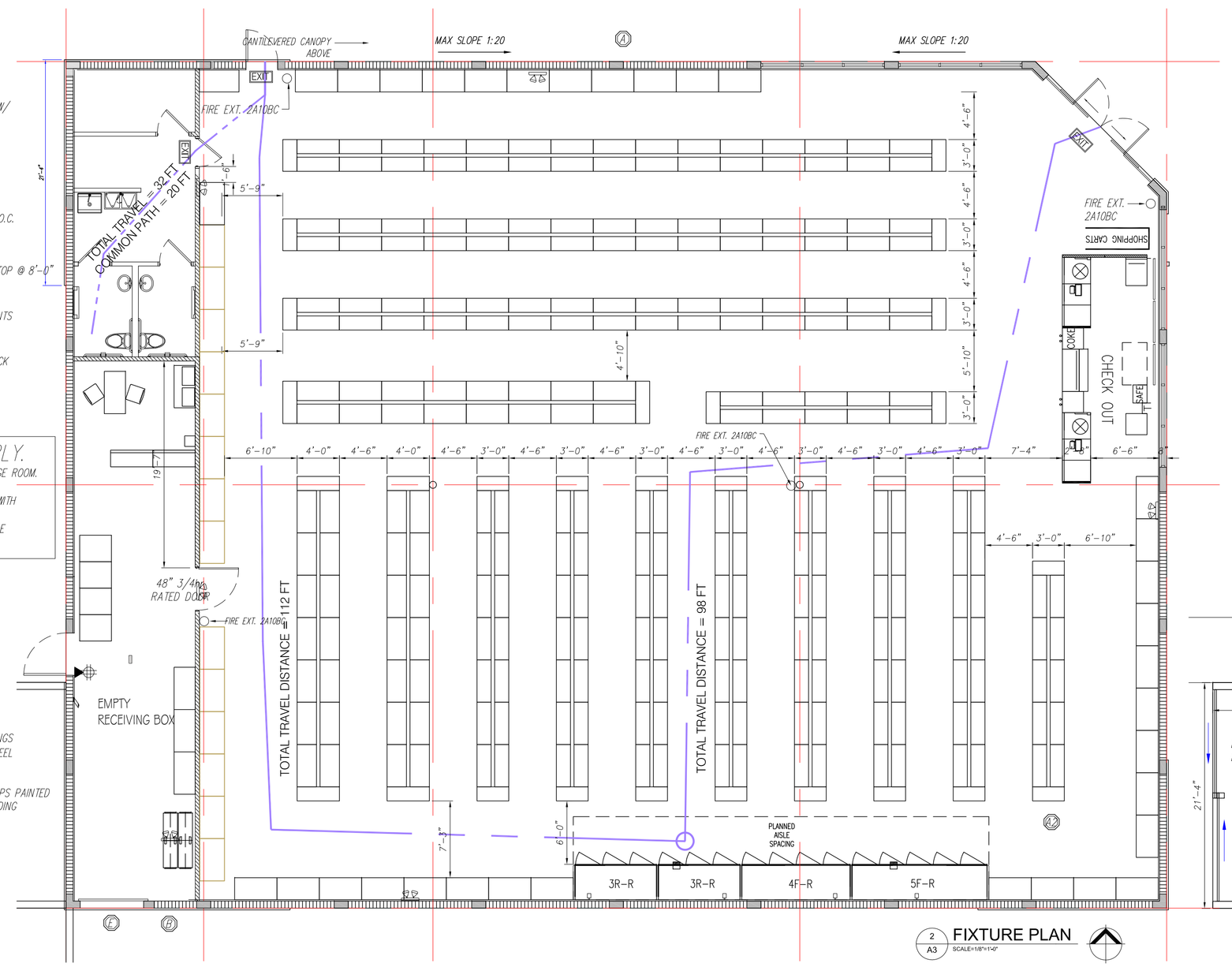

2 A3 FIXTURE PLAN
SCALE=1/8"=1'-0"

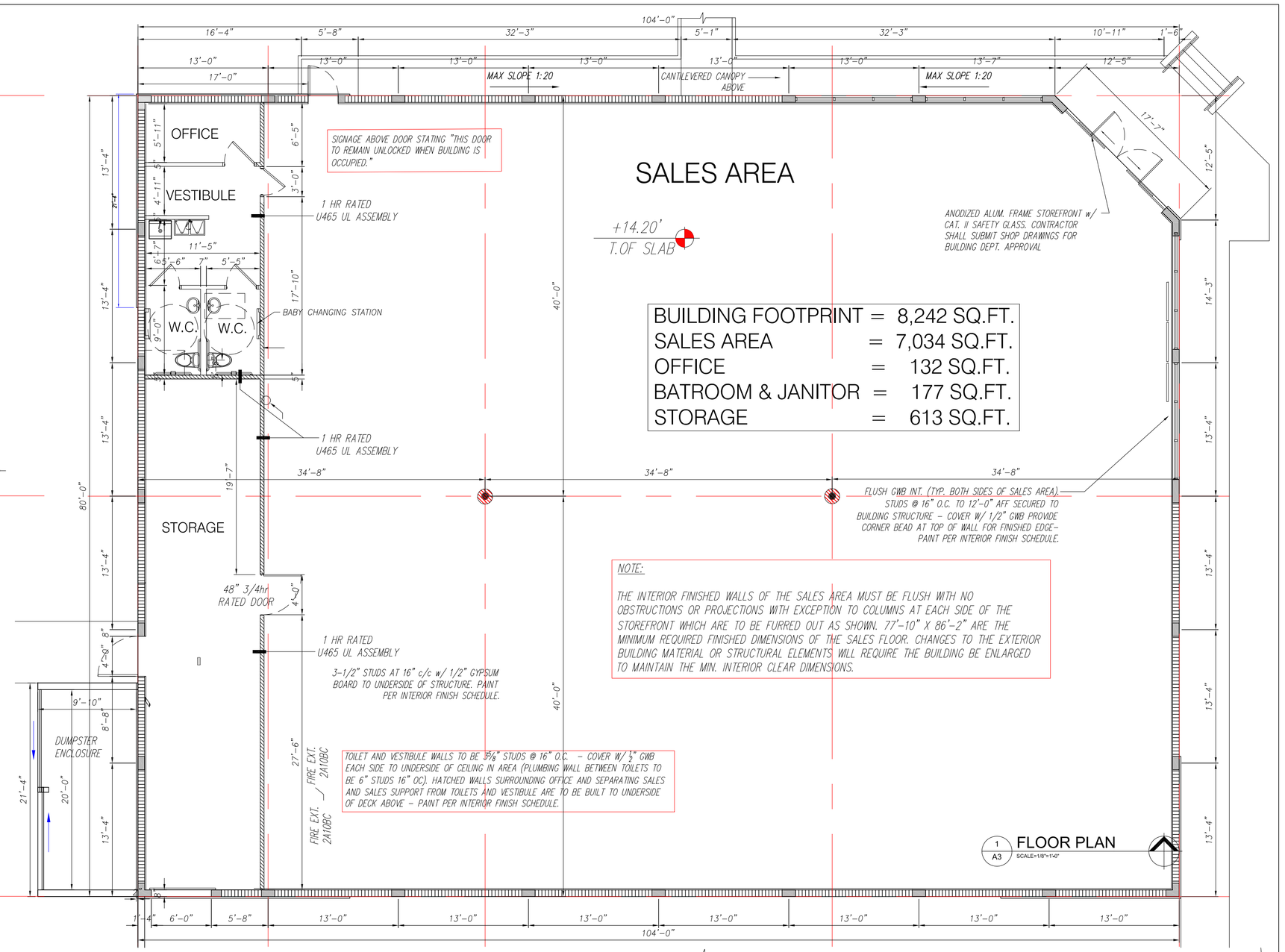

1 A3 FLOOR PLAN
SCALE=1/8"=1'-0"

FANJUL & ASSOCIATES, LLC
ARCHITECTURE, PLANNING & INTERIOR DESIGN

AA26000725

ARTURO G. FANJUL, RA
PRESIDENT

1172 S. DIXIE HIGHWAY SUITE 333
CORAL GABLES, FL 33146

PH. 305 726.8313
FAX 305 356.3686

arturo@fanjularchitects.com

"A BETTER LIFE THROUGH DESIGN"

ARTURO G. FANJUL AR0017585
STATE OF FLORIDA REGISTERD ARCHITECT

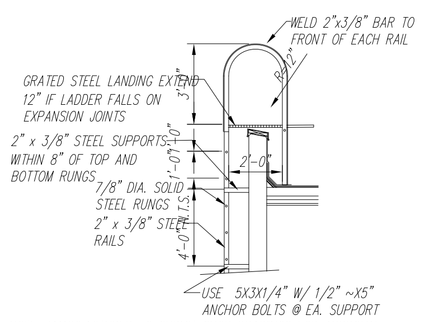

NOTE: MANUFACTURER TO SUBMIT SHOP DRAWINGS FOR APPROVAL
CAGE NOT SHOWN FOR CLARITY
ALL STEEL TO BE GALV. AND PAINTED TO MATCH ADJ. WALL

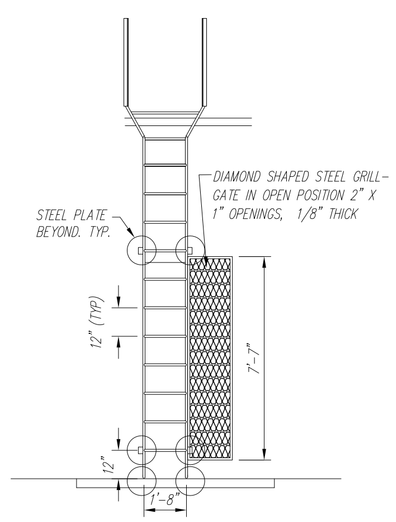

ACCESS LADDER DETAIL.
nts

"A.D.A." NOTES

TOILET ROOMS SHALL CONFORM TO ALL REQUIREMENTS OF 2010 FLORIDA BUILDING CODED: ACCESSIBILITY

A. WATER CLOSET SEAT HEIGHT- 17" TO 19" A.F.F.
B. CENTERLINE OF WATER CLOSET - 18" FROM SIDE WALL.
C. GRAB BAR BEHIND WATER CLOSET- 36" LONG, 33" TO 36" A.F.F.
D. GRAB BAR AT SIDE OF WATER CLOSET- 42" LONG 33" TO 36" A.F.F.
E. GRAB BAR DIAMETER- 1 1/2"
F. SPACE BETWEEN WALL AND GRAB BAR 1 1/2"
G. TOILET PAPER DISPENSER- 36" MAX. FROM REAR WALL 19" MIN. A.F.F.
H. KNEE CLEARANCE AT LAVATORY- APRON 29" MIN HEIGHT 8" MIN DEPTH.
I. LAVATORY DEPTH- 17" MIN.
J. LAVATORY WATER AND DRAIN PIPES INSULATED WHEREVER EXPOSED.
K. LAVATORY RIM SURFACE - 34" MAX. A.F.F.
L. MIRROR BOTTOM EDGE - 40" MAX. A.F.F.
M. INTERNATIONAL SYMBOL OF ACCESSIBILITY SHALL BE MOUNTED ON THE WALL ADJACENT TO THE LATCH SIDE OF THE DOOR WITH THE WORDS MEN AND WOMEN PLACED DIRECTLY BELOW THE PICTORGRAMS. COMPLY WITH THE APPLICABLE PROVISIONS OF THE SECTION 11-4.30 OF THE F.A.C.

THE DIMENSION OF THE PICTOGRAM SHALL BE 6 INCH MIN. IN HEIGHT THESE SIGNS SHALL BE IN ACCORDANCE WITH THE FLORIDA ACCESSIBILITY CODE.

FINISHES.

1. WALL AND CEILING.
WALL AND CEILING FINISHES SHALL HAVE A FLAME-SPREAD CLASSIFICATION B, ACCORDING FBC 803.1 2010 FLORIDA BUILDING CODE.
2. SMOKE-DEVELOPED INDEX.
WALL AND CEILING FINISHES SHALL HAVE A SMOKE-DEVELOPED INDEX OF NOT GREATER THAN 450, ACCORDING FBC 803.1

3. INSULATION.
INSULATION MATERIALS, INCLUDING FACINGS, SUCH AS VAPOR RETARDERS OR VAPOR PERMEABLE MEMBRANES INSTALLED WITHIN FLOOR-CEILING ASSEMBLIES, ROOF-CEILING ASSEMBLIES, WALL ASSEMBLIES, CRAWL SPACES AND ATTICS SHALL HAVE A FLAME-SPREAD INDEX NOT TO EXCEED 25 WITH AN ACCOMPANYING SMOKE-DEVELOPED INDEX NOT TO EXCEED 450 WHEN TESTED IN ACCORDANCE WITH ASTM E 84 (FBC 803.1).

BATHROOM FINISHES

PROVIDE FRP WALL PANELS.

PROVIDE ADA SLIP COEFICIENT COMPLIANT V.C.T. TILE WITH RUBBER BASE

BATHROOM FIXTURE SCHEDULE

FIXTURE	NAME	MANUFACT.	MODEL
1	DOUBL ROLL TOILET TISSUE	BOBRICK	B-6867
2	42" STAINLESS STEEL GRAB BAR	BOBRICK	B-5806.99X42
3	36" STAINLESS STEEL GRAB BAR	BOBRICK	B-5806.99X36
4	CONTURA SERIES TOWEL DISPENSER	BOBRICK	B-43949
5	ADA FLOOR MOUNTED TOILET WITH FLUSH VALVE	KOHLER/ZURN	K-4302,K-4666 / Z6000AV-WSH-W/1.28 GPF KIT
6	GLASS MIRROR WITH FRAME	BOBRICK	B-290-2436
7	CONTURA SERIES SURFACE MOUNTED SOAP DISPENSER	BOBRICK	B-4112
8	WALL MOUNTED LAVATORY WITH MOUNTING BRACKET	KOHLER	TO BE SELECTED
9	CUSTOM MILLWORK ADA SHROUD	-	

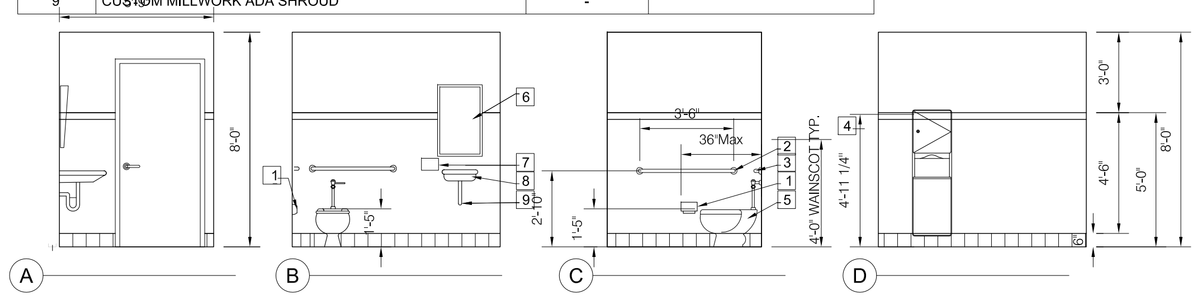

BUILDING INSULATION

1. PROVIDE R-4.1 INSULATION ON ALL EXTERIOR WALLS.
2. PROVIDE MIN R-19 USING 2 LAYERS OF 1-1/2" RIGID ISO INSULATION BOARD. STAGGER ALL JOINTS
3. PROVIDE R-13 BATT INSULATION IN ALL INTERIOR WALL CAVITIES.

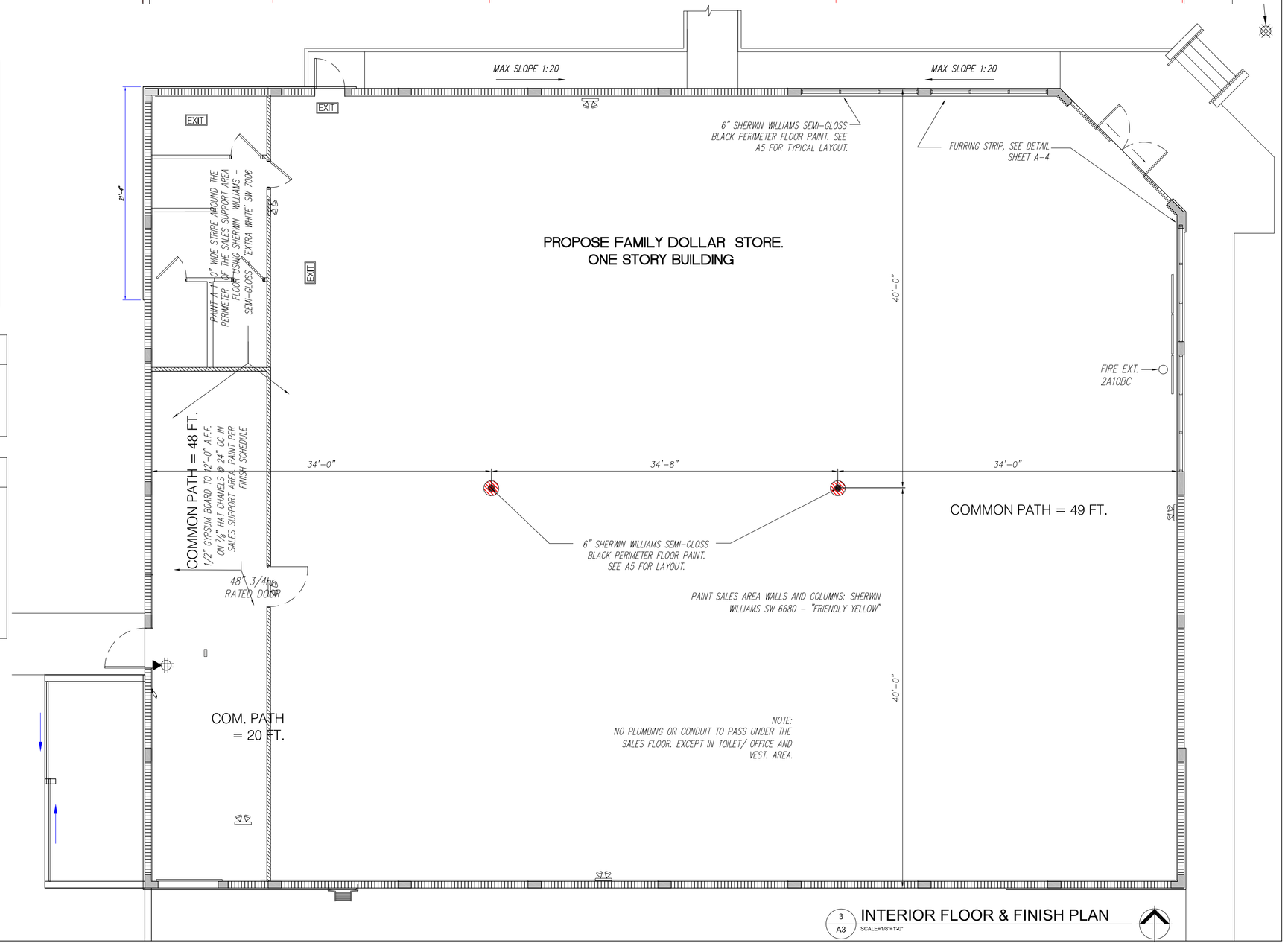

3 A3 INTERIOR FLOOR & FINISH PLAN
SCALE=1/8"=1'-0"

CONSTRUCTION DOCUMENTS FOR:

FAMILY DOLLAR

633 PEMBROKE ROAD
HALLANDALE BEACH, FL
33009

FLOOR PLANS
DOOR & FINISH SCHEDULES

REVISION	NO.
DRC-REWORK-1 6/25/13	

DATE:	5/15/13
SCALE:	AS NOTED
DRAWN:	AGF
CHECKED:	
JOB NO.	13-0107
PERMIT NO.	

OWNERSHIP
OF THESE DOCUMENTS & SPECIFICATIONS AS INSTRUMENTS OF SERVICE ARE AND SHALL REMAIN THE PROPERTY OF THE ARCHITECT WHETHER THE PROJECT THEY ARE MADE FOR IS EXECUTED OR NOT. THEY SHALL NOT BE USED BY OWNER OR OTHERS ON OTHER PROJECTS OR FOR ADDITIONS TO THIS PROJECT BY OTHERS, EXCEPT BY AGREEMENT IN WRITING AND WITH APPROPRIATE COMPENSATION TO THE ARCHITECT.

A3

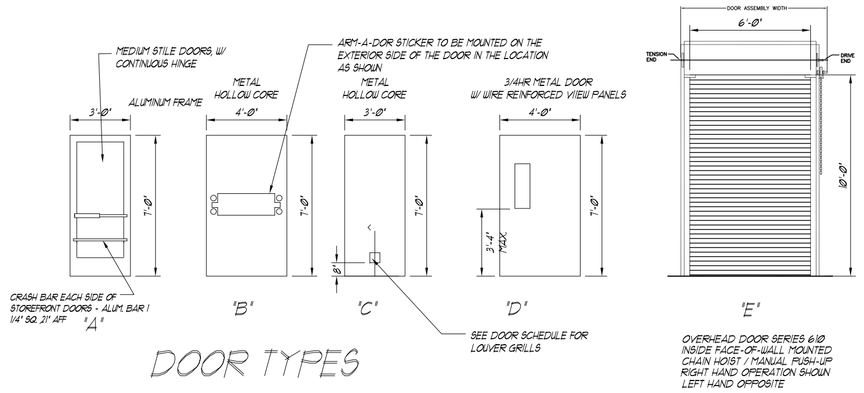

DOOR TYPES

NOTE: ALL EXT. EXIT DOOR THRESHOLDS

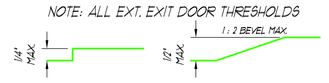

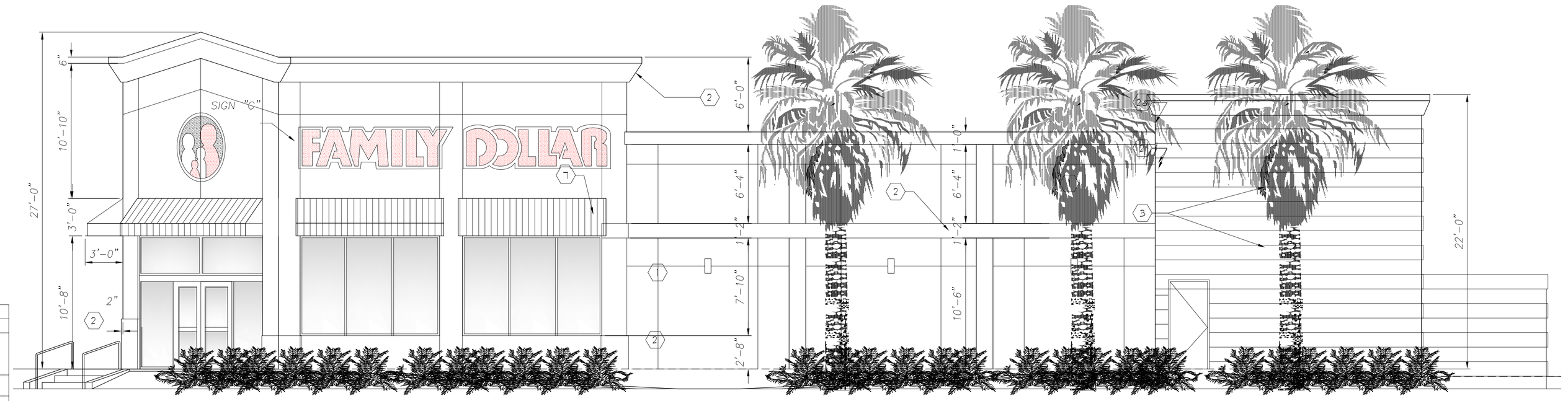

1 / A2 PRIMARY ENTRY ELEVATION (NORTH ELEVATION)
SCALE=3/16"=1'-0"

DOOR SCHEDULE										
NOTES		MARK	SIZE	THICK	TYPE	MATL	BUTTS	LOCK	CLOSER	THRESHOLD	REMARKS
2, 4, 9	ENTRANCE	1	3'-0" X 7'-0"	1 3/4"	A	ALUM/ GLASS	CONTINUOUS HINGE W/ STD. DOOR CLOSURE - CLEAR FINISH	DOUBLE CYLINDER 340.	1285 DEG. HOLD OPEN	1/2" ALUM MILL FINISH	PUSH & PULL BARS STANDARD FINISH W/ PILE CLOTH WEATHERING IN DOOR & FRAME PRIME-ANODIZED CLEAR FINISH
2, 4, 9	ENTRANCE	2	3'-0" X 7'-0"	1 3/4"	A	ALUM/ GLASS	TO MATCH STOREFRONT.	DOUBLE CYLINDER 340.	1285 DEG. HOLD OPEN	1/2" ALUM MILL FINISH	
1, 2, 3, 4, 7	EXTERIOR SALES SUPPORT	3	4'-0" X 7'-0"	1 3/4"	B	H.M.	HAGAR 1279 1 1/2 PR. 4 1/2"x4 1/2" USP	"ARM-A-DOR" A180-085	YES. PAINTED	1/2" ALUM MILL FINISH	ARM-A-DOR PANIC HARDWARE W/ ALARM DEVICE. INSTALL PEEP SITE @ 5'-11" AFF & WEATHERSTRIP. "FRONT SIDE ON LEFT"
2, 6.	SALES SUPPORT	4	PAIR OF 3'-0" X 7'-0"	1 3/4"	D	ALUM/ ACRYL.C.	ALL HARDWARE BY FUTURE OR ELIASON DOOR MANUFACTURER				ELIASON EASY SLING DOOR SYSTEM MODEL LMP-1 NO STOPS ALL HARDWARE BY YKG
2, 3	RESTRO SALES SUPPORT	4-R	4'-0" X 7'-0"	1 3/4"	B	H.M.	HAGAR 1279 1 1/2 PR. 4 1/2"x4 1/2" USP	SCHLAGE AL"BPD-626-JUP	YES. PAINTED	N/A	PEEP SITE @ 5'-0" AFF
3, 8	OFFICE	5	3'-0" X 7'-0"	1 3/4"	C	H.M.	HAGAR 1279 1 1/2 PR. 4 1/2"x4 1/2" USP	SCHLAGE AL"BPD-626-JUP SCHLAGE B"B478-626 DEADBOLT & LEVER KEYED SAME	YES. PAINTED	N/A	PEEP SITE @ 5'-0" AFF, SEPARATE DEAD-BOLT, KEYED W/THERS TURN INSIDE, PROVIDE LOCK GUARD DOOR SEE MECH. IF 0" X 0" HTL. LOUVER IS REQUIRED.
2, 3	VESTIBULE	6	3'-0" X 7'-0"	1 3/4"	C	H.M.	HAGAR 1279 1 1/2 PR. 4 1/2"x4 1/2" USP	SCHLAGE AL"BPD-626-JUP	YES. PAINTED	N/A	PEEP SITE @ 5'-0" AFF, SEE MECH FOR 18" H7 X 12" W HTL. LOUVER
2, 3	MENS	7	3'-0" X 7'-0"	1 3/4"	C	H.M.	HAGAR 1279 1 1/2 PR. 4 1/2"x4 1/2" USP	SCHLAGE AL"BPD-626-JUP	YES. PAINTED	N/A	DOOR UNDERCUT 1" (TYP.) OR 12 X 12 LOUVER
2, 3	WOMENS	8	3'-0" X 7'-0"	1 3/4"	C	H.M.	HAGAR 1279 1 1/2 PR. 4 1/2"x4 1/2" USP	SCHLAGE AL"BPD-626-JUP	YES. PAINTED	N/A	DOOR UNDERCUT 1" (TYP.) OR 12 X 12 LOUVER
1, 2, 3, 4, 7	SALES AREA EMERGENCY EXIT DOOR	9	4'-0" X 7'-0"	1 3/4"	B	H.M.	HAGAR 1279 1 1/2 PR. 4 1/2"x4 1/2" USP	"ARM-A-DOR" A180-085	YES. PAINTED	1/2" ALUM. MILL FINISH	ARM-A-DOR PANIC HARDWARE W/ ALARM DEVICE. SEE NOTE #1 PROVIDE WEATHERSTRIP ALSO. PROVIDE ILLUMINATED EMERGENCY EXIT ONLY SIGNAGE ABOVE DOOR.

DOOR NOTES:

1. FOR ORDERS CONTACT: MILLS AND NEBRASKA AT 407-472-2741 OR EMAIL: AHOLSINAMILLSNEBRASKA.COM MANUF. CONTACT: SARGENT & GREENLEAF, INC. 800-847-8798 FAX 800-634-4843 WEBSITE: WWW.ARM-A-DOR.COM
2. ALL DOOR HARDWARE TO MEET ADA REQUIREMENTS. DOOR TO MEET ADA DOOR OPENING PRESSURE GUIDELINES, MAX. 5 LBS (INT.) & 10-15 LBS (EXTERIOR)
3. ALL HOLLOW METAL DOORS AND FRAMES ARE TO BE PAINTED IN FIELD TO MATCH WALL SURFACE ON EACH SIDE PER EXTERIOR AND INTERIOR FINISH SCHEDULES.
4. ALL EXTERIOR DOORS- INSTALL BRUSH STYLE DOOR SWEEPS USING SEALEAZE C3MDCLADBEL (X) X+3; 3'-6" OR 4' (OR EQUAL) + USE FOR DOORS { 2, 3, 9.
5. STOREFRONT NOTE: PROVIDE HEAD RECEPTOR WHEN SNOW LOAD IS 50. TO OR GREATER THAN 30 PLF.
6. ELIASON DOOR (DOOR 4) BY FDS IF FIXTURE WALL IS ALLOWED BY CODE. IF SEPARATION WALL PART OF THE G.C.'S RESPONSIBILITY IN PROJECT THEN G.C. IS RESPONSIBLE FOR PROVIDING AND INSTALLING ELIASON DOOR AND HARDWARE.
7. ARM-A-DOR PANIC HARDWARE HAS A FUNCTIONAL DEPTH THICKER THAN STANDARD PANIC HARDWARE
8. DO NOT LATCH DEADBOLT WHEN ROOM IS OCCUPIED. "FRONT SIGN AT DOOR N OFFICE INTERIOR

EXTERIOR FINISH SCHEDULE

MATERIALS ARE TO BE APPROVED BY FAMILY DOLLAR STORE COLORS ARE CRITICAL AND MUST BE APPROVED BY FAMILY DOLLAR STORE REPRESENTATIVE IF THEY DIFFER FROM THE SHERWIN WILLIAMS COLORS SHOWN BELOW.

NO.	AREA	TYPE	COATS	COLOR
1	STUCCO BANDING	VP - VEE RIB PANEL NUCOR - ACCENT PANEL	2	SHERWIN WILLIAMS MATCHING COLOR SW 6122 'CAMELBACK'
2	STUCCO ACCENT BANDING	2 - 1-1/2" PROFILE PLASTIC STUCCO REVEAL 2a - 2" PROFILE PLASTIC STUCCO REVEAL	2	MATCH SHERWIN WILLIAMS SW 4081 'SAFETY RED'
3	SMOOTH STUCCO		2	NUCOR COLOR 'LIGHTSTONE' SHERWIN WILLIAMS MATCHING COLOR SW 6148 'WOOL SKEIN'
3A	STUCCO	VP - PANEL RIB NUCOR - CLASSIC WALL	PRE-FINISHED	VP COLOR 'ARCTIC WHITE' NUCOR COLOR 'POLAR WHITE' SHERWIN WILLIAMS MATCHING COLOR SW 6148 'WOOL SKEIN'
4	DOORS GUTTERS, MTL. TRIM & PARAPET CAP	METAL BUILDING MANUFACTURER	PRE-FINISHED	VP COLOR 'TAN' NUCOR COLOR 'SAGEBRUSH TAN' SHERWIN WILLIAMS MATCHING COLOR SW 6122 'CAMELBACK'
5	SMOOTH STUCCO	EXTERIOR LATEX	2	SHERWIN WILLIAMS MATCHING COLOR SW 6122 'CAMELBACK'
6	STEEL BOLLARDS	EXTERIOR LATEX	2	MATCH SHERWIN WILLIAMS SW 4081 'SAFETY RED'
7	METAL ACCENT ROOF	TO BE DETERMINED	PRE-FINISHED	GALVALUME MATCH SHERWIN WILLIAMS SW 4081 'SAFETY RED'

EXTERIOR FINISH NOTES:

1. APPLY MASONRY BLOCK FILLER TO CONCRETE BLOCK PRIOR TO FINISH PAINTING.
2. IF METAL BUILDING IS USED, G.C. TO SUBMIT MANUFACTURER'S STANDARD COLORS TO FAMILY DOLLAR FOR APPROVAL.
3. G.C. OR PAINT CONTRACTOR MUST NOTIFY LOCAL SHERWIN WILLIAMS DEALER THAT PAINT IS BEING PURCHASED FOR A FAMILY DOLLAR STORE AND PROVIDE SHERWIN WILLIAMS DEALER WITH STORE LOCATION.

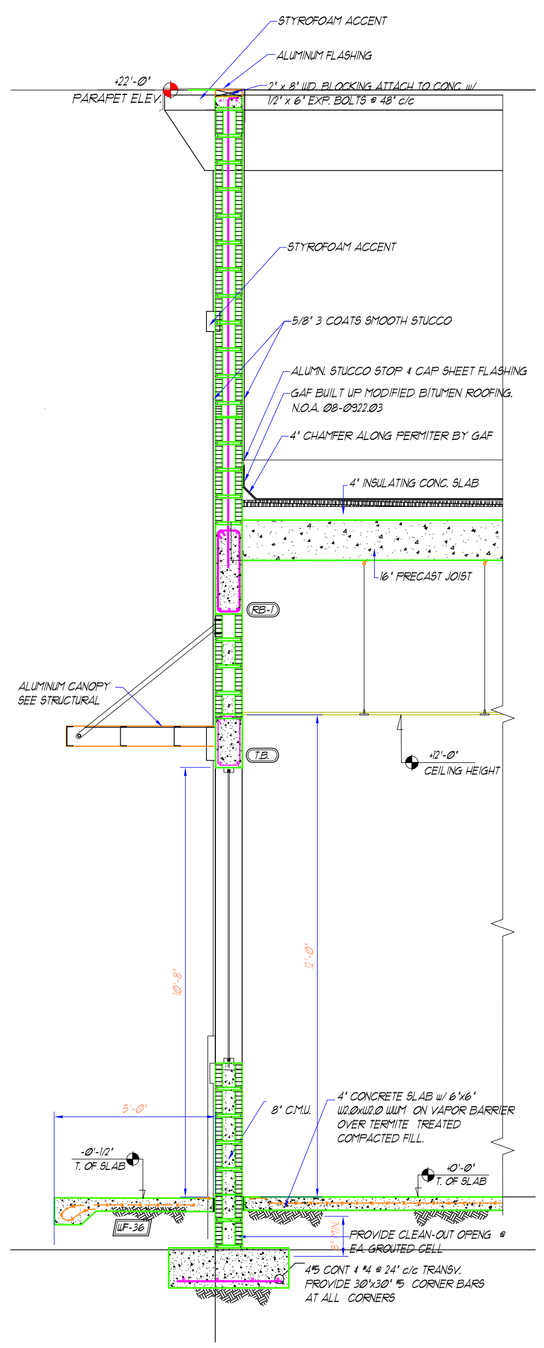

5 / A2 BUILDING SECITON
SCALE=1/4"=1'-0"

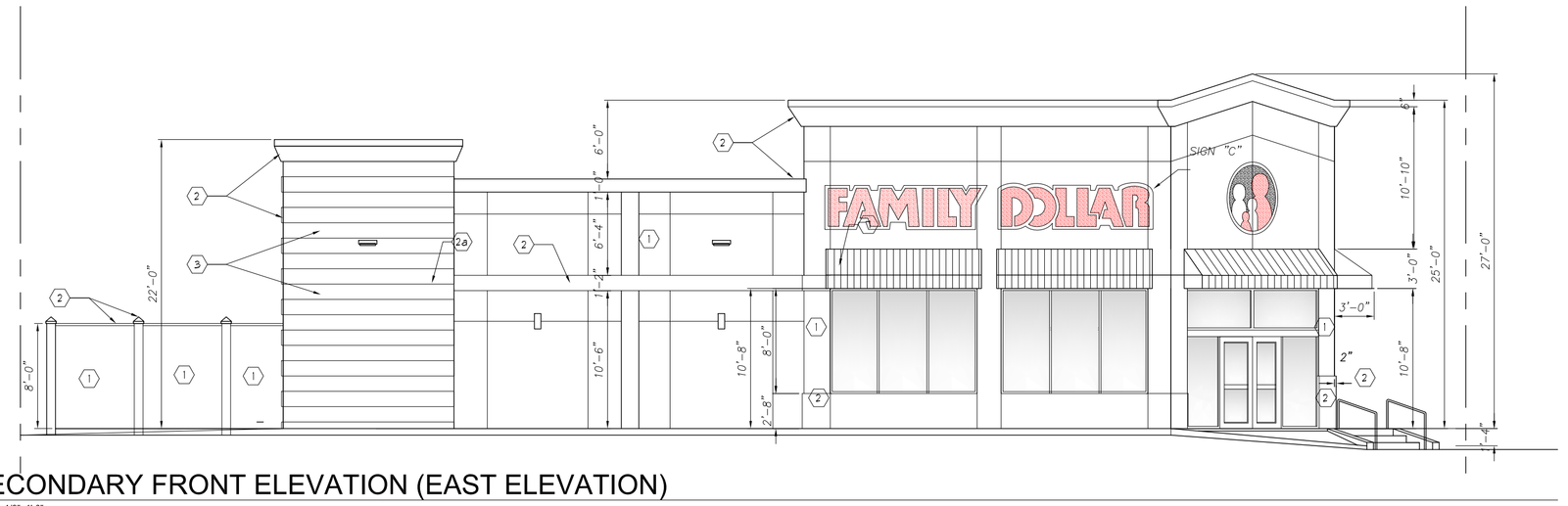

2 / A2 SECONDARY FRONT ELEVATION (EAST ELEVATION)
SCALE=1/8"=1'-0"

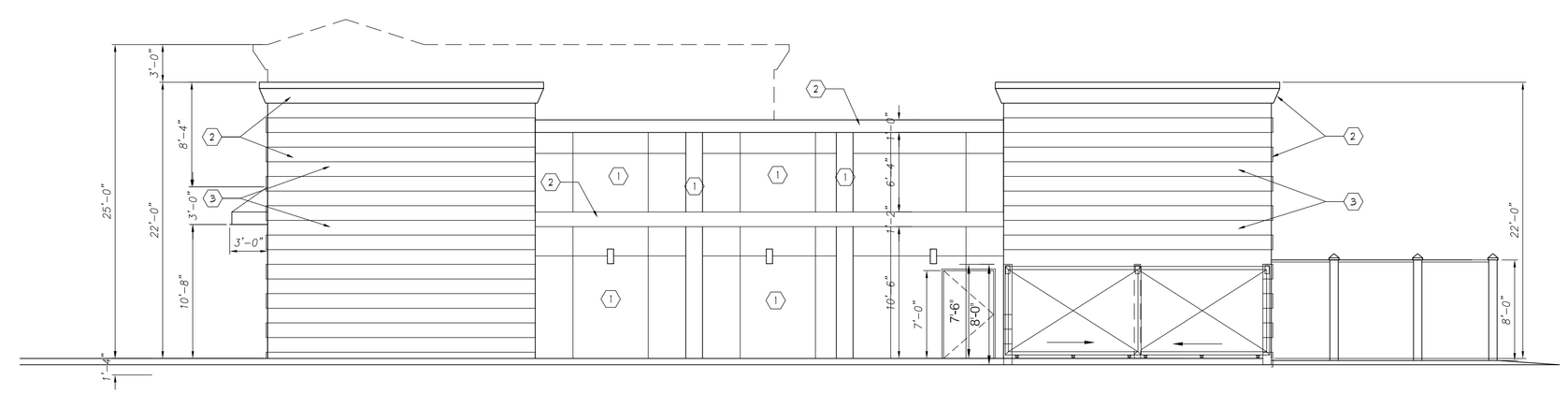

3 / A2 SIDE ELEVATION (WEST ELEVATION)
SCALE=1/8"=1'-0"

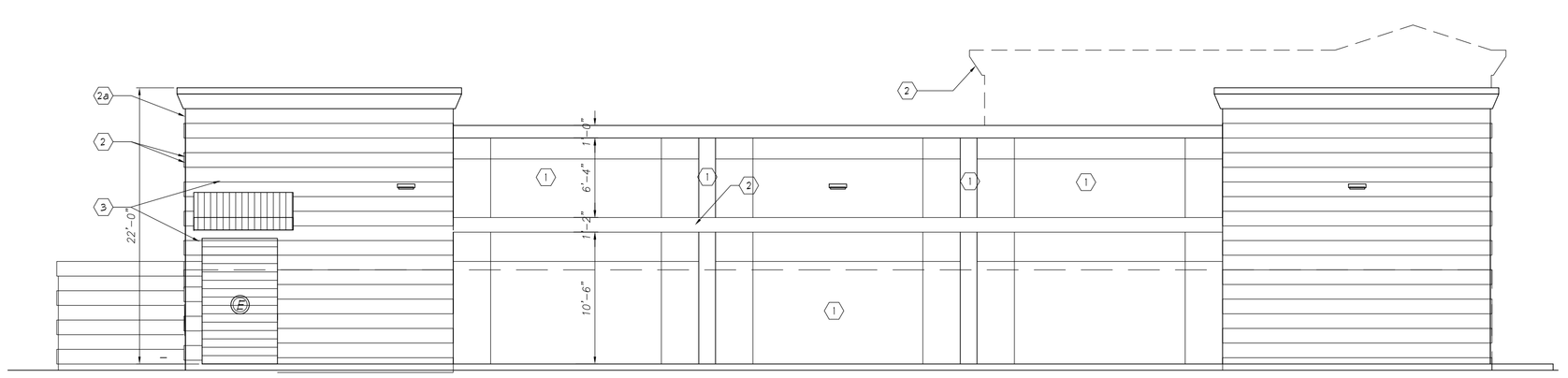

4 / A2 REAR ELEVATION (SOUTH ELEVATION)
SCALE=1/8"=1'-0"

FANJUL & ASSOCIATES, LLC
ARCHITECTURE, PLANNING & INTERIOR DESIGN

AA26000725

ARTURO G. FANJUL, RA
PRESIDENT

1172 S. DIXIE HIGHWAY SUITE 333
CORAL GABLES, FL 33146

PH. 305 726.8313
FAX 305 356.3686

arturo@fanjularchitects.com

"A BETTER LIFE THROUGH DESIGN"

ARTURO G. FANJUL AR0017585
STATE OF FLORIDA REGISTERD ARCHITECT

CONSTRUCTION DOCUMENTS FOR:

FAMILY DOLLAR

633 PEMBROKE ROAD
HALLANDALE BEACH, FL
33009

ELEVATIONS , NOTES & SCHEDULES

REVISION	NO.
DRC-REWORK-1 6/25/13	

DATE:	5/15/13
SCALE:	AS NOTED
DRAWN:	AGF
CHECKED:	
JOB NO.	13-0107
PERMIT NO.	

OWNERSHIP
OF THESE DOCUMENTS & SPECIFICATIONS AS INSTRUMENTS OF SERVICE ARE AND SHALL REMAIN THE PROPERTY OF THE ARCHITECT WHETHER THE PROJECT THEY ARE MADE FOR IS EXECUTED OR NOT. THEY SHALL NOT BE USED BY OWNER OR OTHERS ON OTHER PROJECTS OR FOR ADDITIONS TO THIS PROJECT BY OTHERS, EXCEPT BY AGREEMENT IN WRITING AND WITH APPROPRIATE COMPENSATION TO THE ARCHITECT.

A2

FAMILY DOLLAR
FAMILY DOLLAR